Think GAIA
For Life and the Earth

SANYO

High Performance Professional LCD Monitors

VMC-L2017 NTSC
VMC-L2019 NTSC

- 17″ or 19″ active matrix TFT LCD panels
- 1280 x 1024 resolution
- 1000:1 high contrast ratio
- 2 composite inputs (Loopthrough out, BNC type)
- 1 VGA input and 1 S-VIDEO input
- 2 audio inputs (RCA type)
- Multi-language OSD (11 languages)
- Remote controller

VMC-L2017

Screen image is simulated.

VMC-L2017/L2019

Features

- More than 500 TV lines of horizontal resolution
- NTSC or PAL automatic detection
- 2 composite, S-video and 2 audio inputs A, B plus VGA input
- 1280 x 1024 resolution
- Multilingual menu support: English / French / German / Spanish / Italian / Russian / Swedish / Portuguese / Korean / Chinese / Japanese
- Picture-in-Picture (PIP) function
- 1000:1 high contrast ratio
- VESA 100 x 100 standard mounting bracket compatible
- Remote controller
- Over scan/under scan selectable

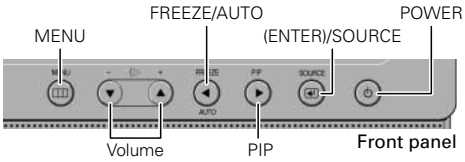

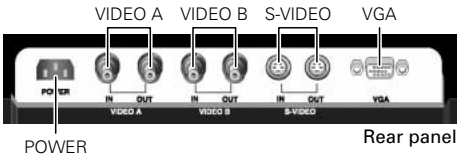

Specifications

Model No.		VMC-L2017	VMC-L2019
Display type		SXGA a-Si TFT LCD	
Color system		NTSC/PAL (Automatic detection)	
LCD display		17" active matrix TFT LCD panel	19" active matrix TFT LCD panel
Viewable size (H x V)		338 x 270 mm / 13.3 x 10.6 in. (4:3)	376 x 301 mm / 14.8 x 11.9 in. (4:3)
Pixel pitch (H x V)		0.264 x 0.264 mm / 0.01 x 0.01 in.	0.294 x 0.294 mm / 0.012 x 0.012 in.
Horizontal resolution		1280 x 1024, 500 TV lines or more (Y/C input mode)	
Viewing angle degree		Left/Right/Up/Down: 80°	
Scanning frequency		Horizontal: 31 kHz to 82 kHz, Vertical: 50 Hz to 77 Hz	
Contrast ratio		1000:1	
Brightness		300 cd/m² / 359 cd/yd²	
Response time Tr/Tf		1.3/3.7 m/sec.	
Display color		1,670 M	
Display monitor timing		VESA compatible (VGA mode)	
Display mode		Video A, Video B, S-Video, VGA	
Input connector	Video signal (BNC IN)	Composite sync signal, 1.0 V(p-p), 75 Ω BNC connector x 2	
	S-Video signal (Y/C IN)	Separate Y/C signal, mini-DIN connector / Y signal: 1.0 V(p-p), 75 Ω negative sync C signal: 0.286 V(p-p), 75 Ω negative sync	
	Audio signal (AUDIO IN)	6.0 dBs (400 mVrms), 2W (1W+1W) stereo, RCA pin x 2	
	VGA signal (VGA IN)	VGA monitor connector (15-pin) Red signal, Green signal, Blue signal: 0.7 V(p-p), 75 Ω, positive sync	
Output connector	Video signal (BNC OUT)	Composite sync signal, 1.0 V(p-p), 75 Ω BNC connector x 2	
	S-Video signal (Y/C OUT)	Separate Y/C signal, mini-DIN connector Y signal: 1.0 V(p-p), 75 Ω negative sync / C signal: 0.286 V(p-p), 75 Ω negative sync	
Menu language		English / French / German / Spanish / Italian / Russian / Swedish / Portuguese / Korean / Chinese / Japanese	
Power input		AC100 – 240 V/0.7 A	
Operating condition		Temperature: –10°C to +40°C/14°F to 104°F Humidity: 10% to 80% (non-condensation)	
Storage condition		Temperature: –20°C to +45°C/–4°F to +113°F Humidity: 5% to 95% (non-condensation)	
Power consumption		Approx. 42 W	
Weight		Approx. 6.0 kg (13.2 lbs.)	Approx. 6.9 kg (15.2 lbs.)

- All specifications and features are subject to change without notice.
- For complete information on product specifications and accessories, please contact your local SANYO supplier.

Accessories and Dimensions

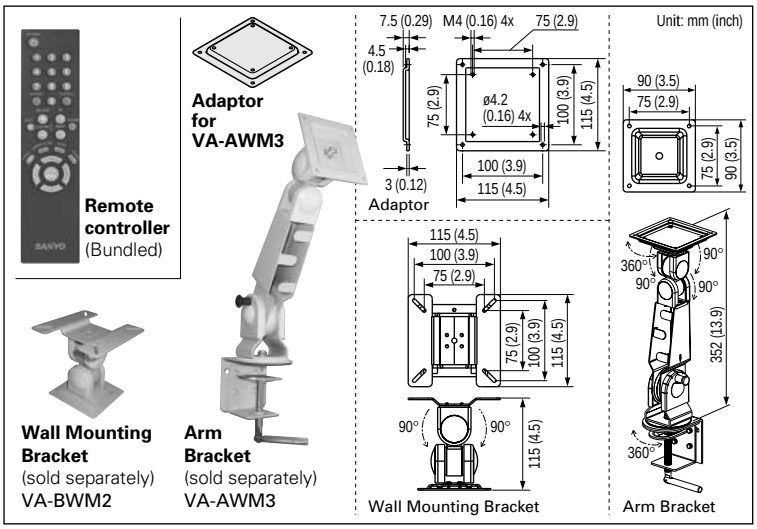

Dimensions and Angles

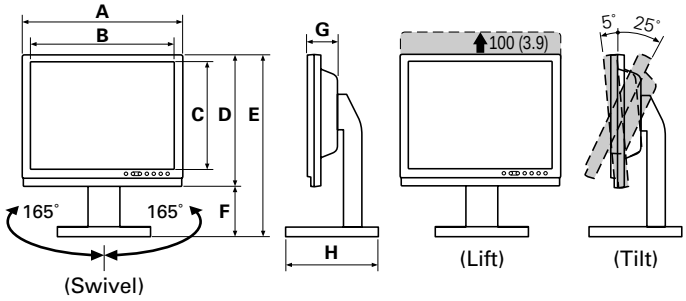

Model	A	B	C	D	E	F	G	H
VMC-L2017	371 (14.6)	339 (13.4)	272 (10.7)	331 (13.0)	368 (14.5)	37 (1.5)	67 (2.6)	220 (8.7)
VMC-L2019	412 (16.2)	378 (14.9)	303 (11.9)	361 (14.2)	398 (15.7)		69 (2.7)	

Unit: mm (inch)

Caution: Please consult the instruction manual to ensure safe and proper operation of the product.

DI Company of SANYO Electric Co., Ltd. obtained Quality Management System ISO 9001 and Environmental Management System ISO 14001 certifications.

Distributed by:

SANYO Electric Co., Ltd.
DI Company
http://www.sanyosecurity.com

©2008 SANYO Printed in Japan 2008.1 MA
SFA165F